ORION®

MA-DX Series

Deluxe Rotary Tower Automatic In-line Pallet Wrapping Systems

R&E
ROBOTICS & END OF LINE

MA-DX Series

DELUXE ROTARY TOWER AUTOMATIC
IN-LINE PALLET WRAPPING SYSTEMS

INDUSTRY LEADING CAT-3 SAFETY FEATURES ARE STANDARD

CAT-3 electrical features, including separate high and low voltage panels, improves operator safety. Multi-zone safety e-stops, stop only the process zone. The operator can safely switch out film while the product stages on the infeed or continues on exit conveyors.

The ultimate high-speed pallet wrappers

Our top selling MA-DX stretch wrapping system incorporates a super-stable 4-leg design that can be found in some of America's top Fortune 500 manufacturing and distribution plants, and for good reason. A long list of productivity improving features make the MA-DX the go-to system for high-performance applications.

And, now our dual arm - dual carriage MA-DX2 kicks high-speed performance up another notch. Using two 30" Insta-Thread™ film carriages and 28 RPM counter-balanced rotary arms, the MA-DX2 pushes load throughput to 100 pallets an hour.

The MA-DX's made in the USA quality and durability further contribute to improved productivity and quick ROI.

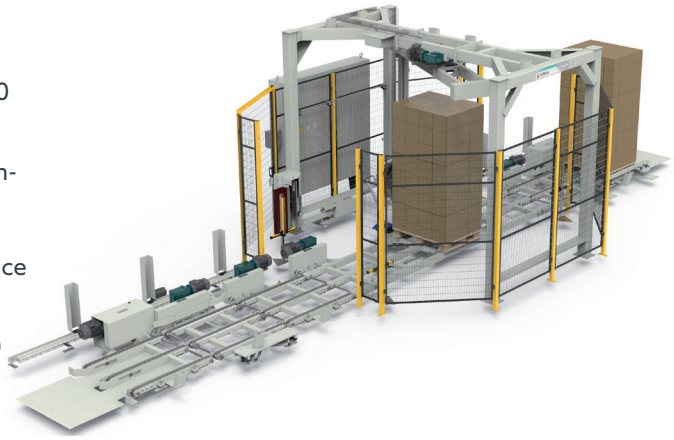

In today's modern, fast-paced facilities efficiency is paramount. Quick throughput, repeatability and load stabilizing features of the MA-DX Series wrappers provide a lower total cost of ownership, along with the highest levels of performance, flexibility, and durability.

Features of the MA-DX & MA-DX2 Dual Carriage

SIMPLICITY · CONTAINMENT · REPEATABILITY · DURABILITY

- Password protected 10" IntelleVue HMI features intuitive touch screen display with up to 9 wrap recipes. Display is incorporated in a free standing pedestal that improves line of sight of the process.
- Insta-Thread™ film carriage, faces the side for easier film roll loading and threading. Specially designed rollers accurately elongate film a standard 260%, providing the most secure loads at the lowest cost.
- Automatic, labor saving film tail cut & wipe attractively secures film using minimal film.
- Made in the USA quality using heavy-duty welded steel frame in a super stable 4 leg design
- Allen Bradley/Series PLC controller & Variable Frequency Drive (VFD)
- Low maintenance, long lasting AC motors
- Automatic load height sensing photo-eye
- Fully sealed high quality slip ring guards against dirt, dust and debris, and is virtually maintenance free.
- Revo-Logic technology with photo-eye sensors for precise application of programmed wraps—maximizing load containment and film yield
- Customizable, precise, product saving load containment every time.
- Separate up and down film carriage speed control and top and bottom adjustable wrap counts
- Automatic film force to load corner compensating patented carriage
- 4,000 lb. standard conveyor with options up to 6,000 lb. custom conveyance.
- Optional Lo-Pro Drag Chain conveyor for smooth, 60 fpm conveyance of up to three 2,500 lb. pallets.
- Wire-mesh, light curtains, and AB guard master interlocked doors switches helps guarantee safety.

ADDITIONAL MA-DX2 FEATURES

- Incorporates a second rotary arm and film carriage on the opposite side of the load.
- Opposing carriages apply film in a crisscross pattern that improves speed, and provides additional stability.
- Dual 30" Insta-Thread™ film carriages and 28RPM counter-balanced rotary arms push load throughput up to 100 pallets an hour.

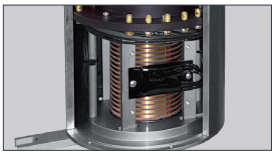

Fully Sealed Slip Ring

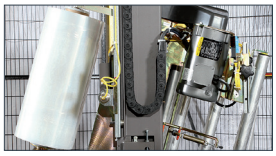

Insta-Thread™ Film Carriage

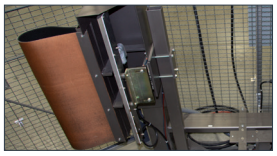

Film Cut & Wipe

IntelleVue 10" HMI

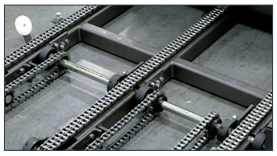

Lo-Pro Drag Chain Conveyor

MACHINE DRAWINGS

Dimensions - Inches
(Safety fence not shown.)

MA-DX

Rotary Tower Automatic Stretch Wrapper

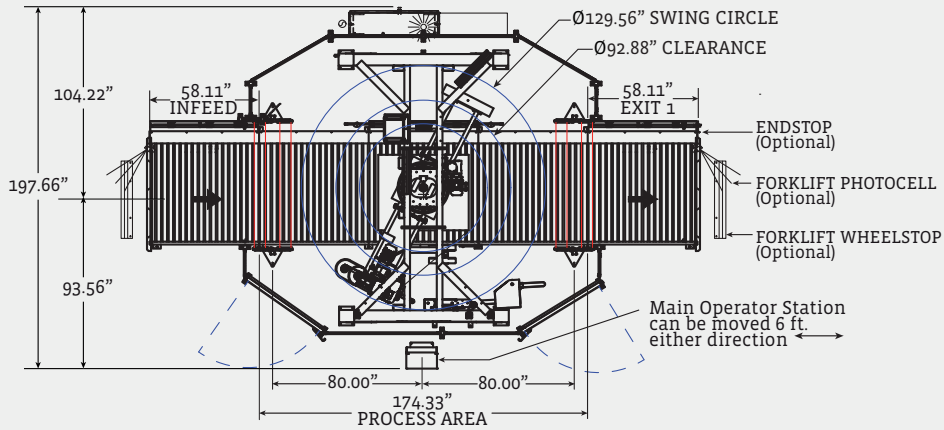

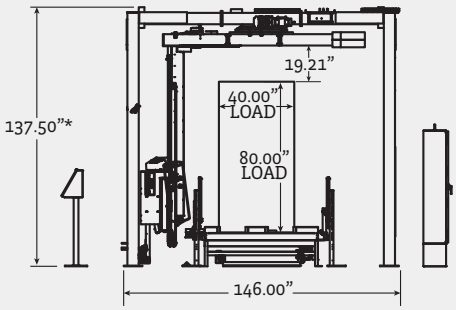

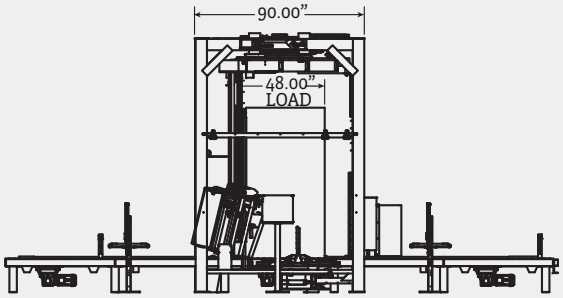

* Approximately 171" (14.25') height clearance is required to rotate the frame to vertical

MA-DX2

Dual Carriage Rotary Tower Automatic Stretch Wrapper

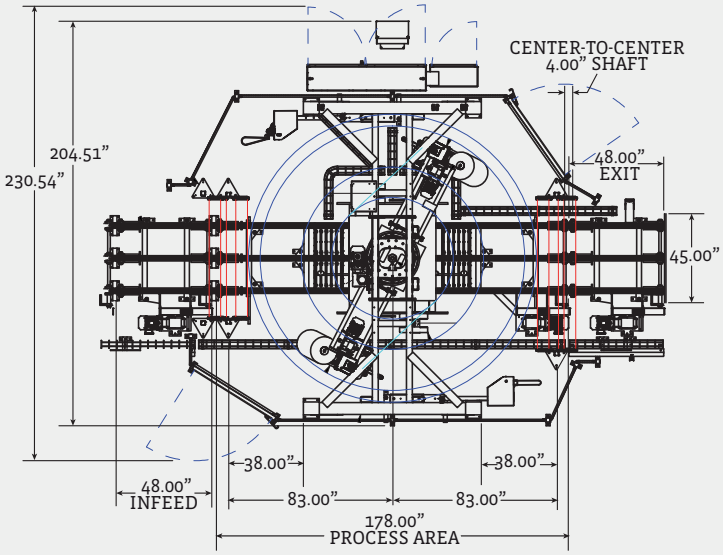

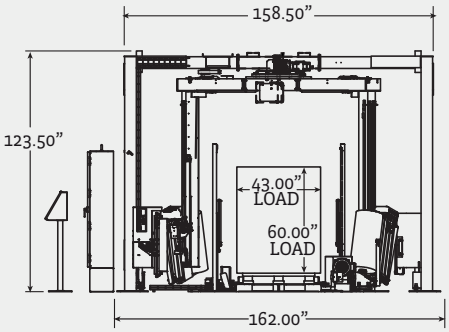

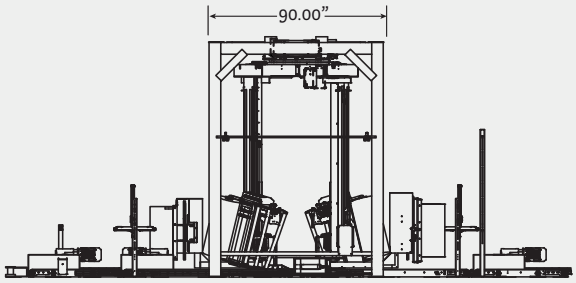

* Approximately 164" (13.75') height clearance is required to rotate the frame to vertical

TYPICAL PRODUCT SPECIFICATIONS

Speed	MA-DX - 18 RPM Standard MA-DX2 - 28 RMP Standard
Air Requirements	6 CFM @ 80 PSI
Safety	CAT 3 safety rating

Main Electrical Enclosures	Built to UL508A standards and UL Listed (Enclosures optioned for CE will not carry a UL label
Standard Voltage	480/3/60 (4 wire, 3 lines plus ground)

PROMACH®

ORION®

Make sure every load is safe and secure during its journey to market with Orion, the leader in heavy-duty industrial stretch wrapping technology. Orion is the industry's leading manufacturer and worldwide distributor of automatic stretch wrapping machines and semiautomatic stretch wrapping equipment, including rotary turntables, rotary towers, and horizontal wrapping systems. As part of the ProMach End of Line business line, Orion helps our packaging customers protect and grow the reputation and trust of their consumers. ProMach is performance, and the proof is in every package. Learn more about Orion at www.OrionPackaging.com and more about ProMach at ProMachBuilt.com.

USA

Orion Packaging

4750 County Road 13 NE

Alexandria, MN 56308

P: 320-852-7705

TOLL FREE: 800-333-6556

E: Orion@ProMachBuilt.com

OrionPackaging.com

MADE IN THE USA

©2020 ProMach Inc. ProMach reserves the right to change or discontinue specifications and designs shown in this brochure without notice or recourse
Product Brochure - MA-DX Series 11-4-21